PRODUCT SPECIFICATIONS

32VFHC Vent Free System

INTERIOR DIMENSIONS

Front opening width: 29-7/8"
Front opening height: 21-7/8"
Rear wall width: 23-3/8"
Firebox depth: 13-1/4"

TECHNICAL INFORMATION

Max. BTU Input: 38,000 BTU/HR
Ignition System: Standing Pilot
Gas Type: Natural or LP
Clearance to Fireplace: Zero
CSA Design Certified

FIELD INSTALLED ACCESSORIES

Louvers: Polished Brass, Pewter
Curved Trim: Brass, Pewter, Black
Medium Trim: Brass, Pewter, Black
Variable Thermostat Controlled Forced Air Blower (160cfm) - BLOTMC
Radiant Panel Kits
Tavern Brown firebrick
Cottage Red
Ambient Technologies™ Remote Controls and Thermostats
Wood Cabinet Surrounds and Hearths
Classic and Designer Facings

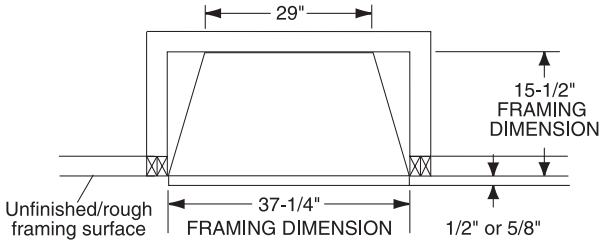

TOP VIEW

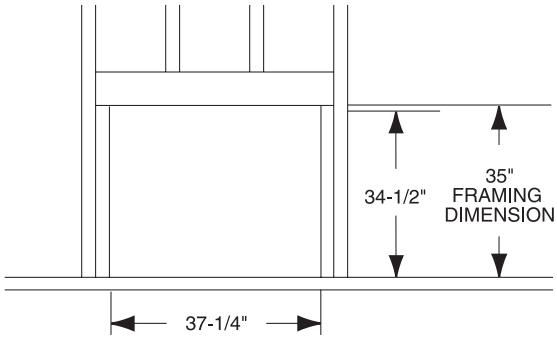

FRONT VIEW

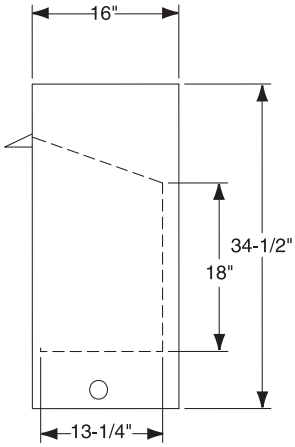

SIDE VIEW

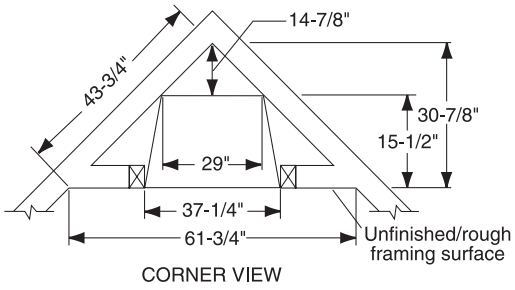

CORNER VIEW

MADE IN U.S.A.

A Brand of Monessen Hearth Systems Co.
149 Cleveland Drive, Paris, Kentucky 40361
www.majesticproducts.com

MAJESTIC

To avoid personal injury or property damage, the product described by this brochure must be installed, operated and maintained in strict compliance with the instructions packaged with the product and all applicable building or fire codes. Contact local building or fire officials about restrictions and installation inspection requirements. All photographs and drawings on this brochure are for illustrative purposes only and are not intended for, nor should they be used as a substitute for the instructions packaged with the unit. Appearance and specifications of the product are subject to change without notice. 04/09